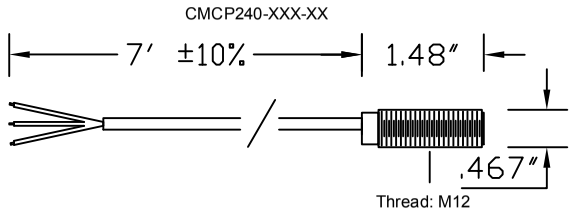

Wiring Guide	
Brown	+V
Blue	0V
Black	Signal

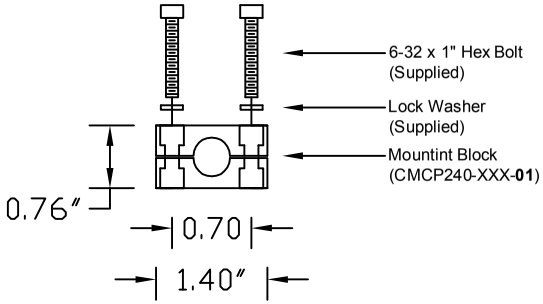

Protruding Target

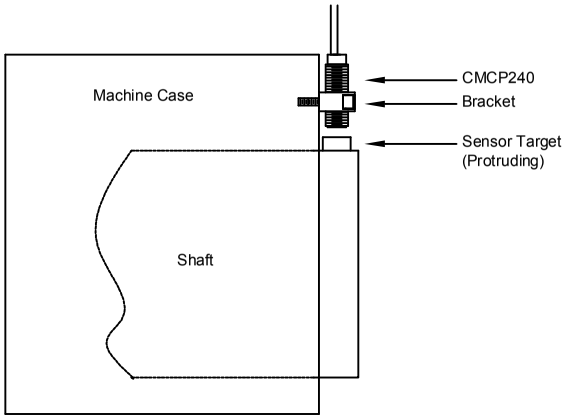

Gear Tooth

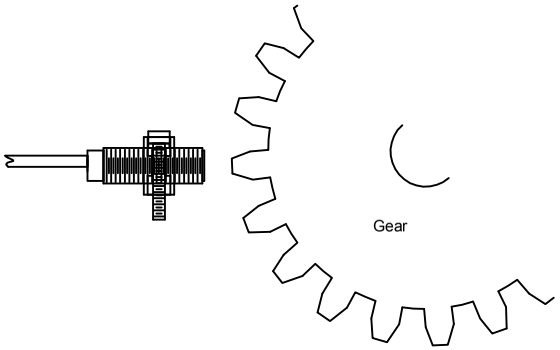

Recessed Target

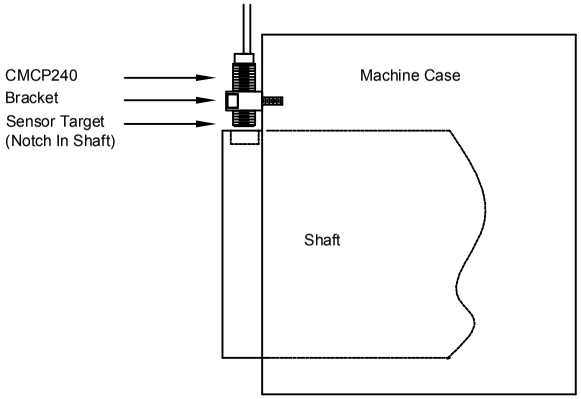

See Note 1 and 2

Michael D. Howard
CERTIFIED VIBRATION ANALYST CATEGORY II
VIBRATION INSTITUTE FOUNDED IN 1972
0902-4773A

Notes:
1: Gap Probe to 2mm ±10%
2: Minimum Target Size of 12 x 12 x 1mm
2: Operating Temperature Range of -40°C to 85°C

THIS DOCUMENT IS PROPERTY OF STI AND CANNOT BE UNDER ANY CIRCUMSTANCES COPIED OR USED FOR ANY UNAUTHORIZED PURPOSE WITHOUT WRITTEN CONSENT FROM STI. THIS DOCUMENT CANNOT BE TRANSFERRED TO ANY THIRD PARTY WITHOUT APPROVAL FROM STI.

REV.	DATE	DRAWN	DESCRIPTION

CUSTOMER	
LOCATION	
ORDER NO.	
SR. NO	

UNLESS OTHERWISE SPECIFIED ALL DIMENSIONS ARE INCHES.

TOLERANCES:
FRACTIONS ± 1/64
DECIMALS .XX ± 0.01, .XXX ± 0.005, .XXXX ± 0.0005
ANGLES ± 1.0

DRAWN	MDH	DATE 3/8/10
CHECK		
ENG.		
MFG.		
APPR.		

STI

STI Vibration Monitoring
League City, Texas

CMCP240 Mounting

SIZE	DWG. NO.	REV.
A		A

SCALE: NONE | SHEET 1 OF 1